2021 DUCK CREEK MERIT BADGE MANIA

100% Virtual

It's time for the Annual Duck Creek Merit Badge Mania!

This year all classes are 100% online

Saturday, January 30, 2021

Session 1 – 8:00 am to 12:00 pm
(Central Time)
Session 2 – 1:00 pm to 5:00 pm
(Central Time)

Each Session is $5.00
(excluding the REC/Chaplain Training)

David Freeborn
Merit Badge Mania Chair

Class Catalog

2021 DCDMBM Virtual

Table of Contents

21DC100 American Business 3
21DC101 American Labor 3
21DC102 Animation 4
21DC103 Architecture 5
21DC104 Art, Photography 6
21DC105 Astronomy 8
21DC106 Citizenship in the Community 9
21DC107 Citizenship in the Nation 10
21DC108 Citizenship in the World 12
21DC109 Coin Collecting 12
21DC110 Collections 13
21DC111 Communication 15
21DC112 Electricity 16
21DC113 Electronics 16
21DC122 Engineering, Programming 22
21DC114 Family Life 23
21DC115 Fingerprinting 25
21DC116 Fire Safety 25
21DC117 Genealogy, Scouting Heritage 26
21DC118 Insect Study 29
21DC119 Law 29
21DC120 Music 30
21DC121 Personal Management 31
21DC123 Public Health 33
21DC200 Religious Emblems Coordinator/Chaplain/Chaplain's Aide Training 35
21DC124 Scholarship 35
21DC125 Soil and Water Conservation 37
21DC126 Space Exploration 40
21DC127 Stamp Collecting 41
21DC128 Traffic Safety 41
21DC129 Weather 43
Class Periods 45

Class Catalog

2021 DCDMBM Virtual

21DC100 American Business

Earning the 'American Business merit badge can help Scouts learn practical business matters that will be useful throughout life. Learning how businesses function will help you understand society and uncover a number of career options.

Notes and Prerequisites: Scouts should be prepared to do these items either before or after the class:

5. Choose a business and research how it applies each of the primary areas of business (accounting, finance, economics, marketing, and management). Share what you have learned with your counselor.

6. Do ONE of the following:
    a. Choose one of the primary areas of business and identify three career opportunities. Select one and research the education, training, and experience required for this career Discuss this with your counselor and explain why this interests you.
    b. Select a business leader and interview this individual to learn more about his or her company and career path. Discuss the role ethics plays in making business decisions. Share what you have learned with your counselor.

Additional Details: American Business Worksheet

21DC101 American Labor

The labor movement in America seeks to ensure that the civil rights of laborers are protected in the workplace, especially in regard to wages, hours, and working conditions.

Notes and Prerequisites: Scouts should be prepared to do these items either before or after the class:

1. Using resources available to you, learn about working people and work-related concerns. List and briefly describe or give examples of at least EIGHT concerns of American workers. These may include, but are not limited to, working conditions, workplace safety, hours, wages, seniority, job security, equal-opportunity employment and discrimination, guest workers, automation and technologies that replace workers,

unemployment, layoffs, outsourcing, and employee benefits such as health care, child care, profit sharing, continuing education, and retirement benefits.

5. Do ONE of the following:
    a. Develop a time line of significant events in the history of the American labor movement from the 1770s to the present.
    b. Prepare an exhibit, a scrapbook, or a computer presentation, such as a slide show, illustrating three major achievements of the American labor movement and how those achievements affect American workers.
    c. With your counselor's and parent's approval and permission, watch a movie that addresses organized labor in the United States. Afterward, discuss the movie with your counselor and explain what you learned.
    d. Read a biography (with your counselor's approval) of someone who has made a contribution to the American labor movement. Explain what contribution this person has made to the American labor movement.

7. Choose a labor issue of widespread interest to American workers-an issue in the news currently or known to you from your work on this merit badge. Before your counselor, or in writing, argue both sides of the issue, first taking management's side, then presenting labor's or the employee's point of view. In your presentation, summarize the basic rights and responsibilities of employers and employees, including union members and nonunion members.

Additional Details: American Labor Worksheet

21DC102 Animation

Computer or traditional animation tasks that will test a Scout's creativity, artistic skills, and storytelling abilities.

Notes and Prerequisites:
Supplies needed while in class:

- Paper
- Pencil
- Scissors

Scouts should be prepared to do these items either before or after the class:

3. Projects. With your counselor's approval, choose two animation techniques and do the following for each:
    a. Plan your animation using thumbnail sketches and/or layout drawings.
    b. Create the animations.
    c. Share your animations with your counselor. Explain how you created each one, and discuss any improvements that could be made.

Additional Details: Animation Worksheet

21DC103 Architecture

Architecture is not just the special buildings like cathedrals, museums, or sports stadiums we read about or see on television; it is as normal as the homes, places of worship, schools, and shopping malls where we live, worship, work, learn, and play every day. However, architecture is more than just common shelter; building has always satisfied the human need to create something of meaning. Even the simplest form of architecture is a work of art that requires thought and planning.

Notes and Prerequisites:
Supplies needed while in class:

- Paper
- Pencil

Per the instructor requirements 1b, 2a, 2b, 2c, 3c, and 5 are planned to be completed in class.

Scouts should be prepared to do these items either before or after the class:

1. a Tour your community and list the different types of buildings you see. Try to identify buildings that can be associated with a specific period of history or style of architecture. Make a sketch of the building you most admire.

4. Measure a room such as one where you live or where your troop meets.

Make an accurately scaled drawing of the room's floor plan showing walls, doors, closets, windows, and any built-in furniture or cabinets. Neatly label your drawing with the following: your name, the date, what room you drew, and the scale of the drawing. (Drawing scale: 1/4 inch = 1 foot)

Additional Details: Architecture Worksheet

21DC104 **Art, Photography**

This merit badge concentrates on two-dimensional art, specifically drawing and painting in various media, including an introduction to design applications in the fields of graphic arts and industrial design, history and design principles, and how these fields relate to fine art.

Beyond capturing family memories, photography offers a chance to be creative. Many photographers use photography to express their creativity, using lighting, composition, depth, color, and content to make their photographs into more than snapshots. Good photographs tell us about a person, a news event, a product, a place, a scientific breakthrough, an endangered animal, or a time in history.

Notes and Prerequisites: Scouts should be able to complete ART but not PHOTOGRAPHY

Supplies needed while in class:

ART - Four of the following:
- Pencils
- Pens
- Watercolors
- Pastels
- Oil Paint
- Acrylic Paint
- Tempera Paint
- Charcoal

PHOTOGRAPHY
- Camera OR Smartphone
- Current Cyber-Chip

Scouts should be prepared to do these items either before or after the class:

ART: Depending on time spent in class on art pieces

4. Render a subject of your choice in FOUR of these ways:
    a. Pen and ink
    b. Watercolors
    c. Pencil
    d. Pastels
    e. Oil paints
    f. Tempera
    g. Acrylics
    h. Charcoal
    i. Computer drawing or painting

5. Do ONE of the following:
    a. Design something useful. Make a sketch or model of your design. With your counselor's approval, create a promotional piece for the item using a picture or pictures.
    b. Tell a story with a picture or pictures or using a 3-D rendering.
    c. Design a logo. Share your design with your counselor and explain the significance of your logo. Then, with your parent's permission and your counselor's approval, put your logo on Scout equipment, furniture, ceramics, or fabric.

PHOTOGRAPHY

4. Do TWO of the following, then share your work with your counselor.
    a. Photograph one subject from two different angles or perspectives.
    b. Photograph one subject from two different light sources-artificial and natural.
    c. Photograph one subject with two different depth of fields.
    d. Photograph one subject with two different compositional techniques.

5. Photograph THREE of the following, then share your work your counselor.
    a. Close-up of a person
    b. Two to three people interacting
    c. Action shot
    d. Animal shot

e. Nature shot
f. Picture of a person-candid, posed, or camera aware

6. Describe how software allows you to enhance your photograph after it is taken. Select a photo you have taken, then do ONE of the following, and share what you have done with your counselor.
   a. Crop your photograph.
   b. Adjust the exposure or make a color correction.
   c. Show another way you could improve your picture for impact.

7. Using images other than those created for requirements 4, 5, or 6, produce a visual story to document an event to photograph OR choose a topic that interests you to photograph. Do the following:
   a. Plan the images you need to photograph for your photo story.
   b. Share your plan with your counselor and get your counselor's input and approval before you proceed.
   c. Select eight to 12 images that best tell your story. Arrange your images in order and mount the prints on a poster board OR create an electronic presentation. Share your visual story with your counselor.

Additional Details: Art Worksheet, Photography Worksheet

21DC105 Astronomy

In learning about astronomy, Scouts study how activities in space affect our own planet and bear witness to the wonders of the night sky: the nebulae, or giant clouds of gas and dust where new stars are born; old stars dying and exploding; meteor showers and shooting stars; the moon, planets, and a dazzling array of stars.

Notes and Prerequisites:
Supplies needed while in class:
• Instructor will email materials prior to class.

Scouts should be prepared to do these items either before or after the class:

4. Do the following:
   a. Identify in the sky at least 10 constellations, at least four of which

are in the zodiac.

b. Identify in the sky at least eight conspicuous stars, five of which are of magnitude 1 or brighter.

c. Make two sketches of the Big Dipper. In one sketch, show the Big Dipper's orientation in the early evening sky. In another sketch, show its position several hours later. In both sketches, show the North Star and the horizon. Record the date and time each sketch was made.

5. Do the following:

   d. Observe a planet and describe what you saw.

6. Do the following:

   b. Sketch the phase and position of the Moon, at the same hour and place, for four nights within a one-week period. Include landmarks on the horizon such as hills, trees, and buildings. Explain the changes you observe.

8. With your counselor's approval and guidance, do ONE of the following:

   a. Visit a planetarium or astronomical observatory. Submit a written report, a scrapbook, or a video presentation afterward to your counselor that includes the following information:

      1) Activities occurring there
      2) Exhibits and displays you saw
      3) Telescopes and other instruments being used
      4) Celestial objects you observed

Additional Details: Astronomy Worksheet

21DC106 Citizenship in the Community

A nation is a patchwork of communities that differ from each other and may be governed differently. But regardless of how local communities differ, they all have one point in common: In the United States, local government means self-government. Good citizens help to make decisions about their community through their elected local officials.

Notes and Prerequisites: Scouts should be prepared to do these items either before or after the class:

3. Do the following:

a. Attend a meeting of your city, town, or county council or school board; OR attend a municipal, county, or state court session.
b. Choose one of the issues discussed at the meeting where a difference of opinions was expressed and explain to your counselor why you agree with one opinion more than you do another one.

5. With the approval of your counselor and a parent, watch a movie that shows how the actions of one individual or group of individuals can have a positive effect on a community. Discuss with your counselor what you learned from the movie about what it means to be a valuable and concerned member of the community.

7. Do the following:
   a. Identify three charitable organizations outside of Scouting that interest you and bring people in your community together to work for the good of your community.
   b. Pick ONE of the organizations you chose for requirement 7a. Using a variety of resources (including newspapers, fliers and other literature, the Internet, volunteers, and employees of the organization), find out more about this organization.
   c. With your counselor's and your parent's approval, contact the organization you chose for requirement 7b, and find out what young people can do to help. While working on this merit badge, volunteer at least eight hours of your time for the organization. After your volunteer experience is over, discuss what you have learned with your counselor.

8. Develop a public presentation (such as a video, slide show, speech, digital presentation, or photo exhibit) about important and unique aspects of your community. Include information about the history, cultures, and ethnic groups of your community; its best features and popular places where people gather; and the challenges it faces. Stage your presentation in front of your merit badge counselor or a group, such as your patrol or a class at school.

Additional Details: Citizenship in the Community Worksheet

21DC107 Citizenship in the Nation

As Scouts fulfill the requirements for this merit badge, they will learn how to become active citizens are aware of and grateful for their liberties and rights, to participate in their governments and protect their freedom, helping to defend their country and standing up for individual rights on behalf of all its citizens.

Notes and Prerequisites:

Minimum Rank: First Class

Scouts should be prepared to do these items either before or after the class:

2. Do TWO of the following:
    a. Visit a place that is listed as a National Historic Landmark or that is on the National Register of Historic Places. Tell your counselor what you learned about the landmark or site and what you found interesting about it.
    b. Tour your state capitol building or the U.S. Capitol. Tell your counselor what you learned about the capitol, its function, and its history.
    c. Tour a federal facility. Explain to your counselor what you saw there and what you learned about its function in the local community and how it serves this nation.
    d. Choose a national monument that interests you. Using books, brochures, the Internet (with your parent's permission), and other resources, find out more about the monument. Tell your counselor what you learned and explain why the monument is important to this country's citizens.

3. Watch the national evening news five days in a row OR read the front page of a major daily newspaper five days in a row. Discuss the national issues you learned about with your counselor. Choose one of the issues and explain how it affects you and your family.

6. With your counselor's approval, choose a speech of national historical importance. Find out about the author and tell your counselor about the person who gave the speech. Explain the importance of the speech at the time it was given and tell how it applies to American citizens today. Choose a sentence or two from the speech that has significant meaning to you and tell your counselor why.

8. Name your two senators and a member of Congress from your congressional district. Write a letter about a national issue and send it to one of these elected officials, sharing your view with him or her. Show your letter to your counselor, along with any response you might receive.

Additional Details: Citizenship in the Nation Worksheet

21DC108 Citizenship in the World

Scouts who earn the Citizenship in the World merit badge will discover that they are already citizens of the world. How good a world citizen each person is depends on his willingness to understand and appreciate the values, traditions, and concerns of people in other countries.

Notes and Prerequisites: Per the Instructors request this class is limited to those age 13 and up.

Additional Details: Citizenship in the World Worksheet

21DC109 Coin Collecting

Coin collecting is one of the oldest of all hobbies. Hoards of ancient coins found in excavations indicate that coins were one of the first collectibles. From earliest times, people valued coins not only as a means of trading and storing wealth, but also as miniature works of art.

Notes and Prerequisites: Scouts should be prepared to do these items either before or after the class:

5. Do ONE of the following: (BRING EITHER A COIN REFERENCE CATALOG OR A NUMISMATIC MAGAZINE OR NEWSPAPER TO CLASS)
    a. Demonstrate to your counselor that you know how to use two U.S. or world coin reference catalogs.
    b. Read a numismatic magazine or newspaper and tell your counselor about what you learned.

9. Do ONE of the following: (BRING YOUR COLLECTION TO CLASS)
    a. Collect and identify 50 foreign coins from at least 10 different

countries.
b. Collect and identify 20 bank notes from at least five different countries.
c. Collect and identify 15 different tokens or medals.
d. For each year since the year of your birth, collect a date set of a single type of coin.

10. Do the following: (BRING THE DRAWINGS TO CLASS)
    a. Do drawings of five Colonial-era U.S. coins.

Additional Details: Coin Collecting Worksheet

21DC110 Collections

Collecting can be an educational and financially rewarding pastime: a collector must educate himself about a specific subject, be able to tell which items are worth preserving, how to catalog and organize his collection, and how to evaluate the value of items.

Notes and Prerequisites: Scouts should be prepared to do these items either before or after the class:

These should be completed and ready to present to your group in class -

1. Prepare a short written report or outline for your counselor, giving a detailed description of your collection, * including a short history. Be sure to include why you chose that particular type of collecting and what you enjoy and have learned from your collection. *
   *Stamp and coin collecting are excluded from eligibility for this merit badge

2. Explain the growth and development of your collection.

3. Demonstrate your knowledge of preserving and displaying your collection.
   a. Explain the precautions you need to take to preserve your collection, including
      1) Handling
      2) Cleaning
      3) Storage
   b. Explain how best to display your collection, keeping in mind

preserving as discussed above.

c. Explain to your counselor the events available for a hobbyist of this collection, including shows, seminars, conventions, contests, and museum programs and exhibits.

8. Find out about career opportunities in collecting. Pick one and find out the education, training, and experience required for this profession. Discuss this with your counselor and explain why this profession might interest you.

These will be covered in class BUT it would be beneficial if you review them before class -

4. Demonstrate your knowledge of collecting and investing. Discuss with your counselor:
    a. How investing and speculation would apply to your collection
    b. What you would look for in purchasing other collections similar to yours
    c. What you would expect in return value if you decided to sell all or part of the collection

5. Do the following:
    a. Discuss with your counselor at least 10 terms commonly used in your collection and be prepared to discuss the definition of each.
    b. Show your counselor any two groups from your collection. Explain how you organized your collection and why you chose that method. (Note: If your collection is too large to transport and your counselor is unable to view your collection directly, photographs should be available to share.)
    c. Explain how your collection is valued by other collectors, and display to your counselor any price guides that may be available.
    d. Explain how your collection is graded for value, physical defects, size, and age. Show the various classifications or ratings used in your collection.
    e. List the national, state, or local association responsive to your collection.
    f. Show the location of and explain to your counselor the identification number (if applicable), series, brand name (if any), and any other special identification marks.

6. Discuss with your counselor the plans you have to continue with the collection in the future.

7. Discuss with your counselor why and how collecting has changed and how this applies to your collection.

Additional Details: Collections Worksheet

21DC111 Communication

This clear and concise definition comes from the U.S. Department of Education: "Communication focuses on how people use messages to generate meanings within and across various contexts, cultures, channels, and media. The field of communication promotes the effective and ethical practice of human communication."

Notes and Prerequisites: Scouts should be prepared to do these items either before or after the class:

The instructor requests that Scouts can fill these elements out ahead of time using the worksheets found at the link.

5. Attend a public meeting (city council, school board, debate) approved by your counselor where several points of view are given on a single issue. Practice active listening skills and take careful notes of each point of view. Prepare an objective report that includes all points of view that were expressed and share this with your counselor.

6. With your counselor's approval, develop a plan to teach a skill or inform someone about something. Prepare teaching aids for your plan. Carry out your plan. With your counselor, determine whether the person has learned what you intended.

8. Plan a troop or crew court of honor, campfire program, or interfaith worship service. Have the patrol leaders' council approve it, then write the script and prepare the program. Serve as master of ceremonies.

Additional Details: Communication Worksheet

21DC112 Electricity

Electricity is a powerful and fascinating force of nature. As early as 600 bc observers of the physical world suspected that electricity existed but did not have a name for it. In fact, real progress in unraveling the mystery of electricity has come only within the last 250 years.

Notes and Prerequisites:
Supplies needed while in class:

- Materials to build the electrical circuits described in the Merit Badge booklet

Scouts should be prepared to do these items before the class:
These can be done by making a video and providing it to the instructor via email or posting on the Miro workspace that will be used in class.

1. Demonstrate that you know how to respond to electrical emergencies by doing the following:
    a. Show how to rescue a person touching a live wire in the home.
    b. Show how to render first aid to a person who is unconscious from electrical shock.
    c. Show how to treat an electrical burn.
    d. Explain what to do in an electrical storm.
    e. Explain what to do in the event of an electrical fire.

2. Complete an electrical home safety inspection of your home, using the checklist found in this pamphlet or one approved by your counselor. Discuss what you find with your counselor.

Additional Details: Electricity Worksheet

21DC113 Electronics

Electronics is the science that controls the behavior of electrons so that some type of useful function is performed. Today, electronics is a fast-changing and exciting field.

Notes and Prerequisites: Per the instructor due to the advanced nature of the material, this class is intended for mature scouts. Please use your own

judgement.

*** **NOTE** ***
This class is will only review the requirements. ALL Requirements will have to be completed OUTSIDE of class.

Supplies and documents needed while in class:

I. Electronics will utilize Merit Badge Worksheet (eff. June 2020)

Day-of class will review worksheet and IEEE materials.

The completion of the Merit Badge will occur **AFTER** class.

In advance of class Scouts should
1) Download the Electronics worksheet
2) Download IEEE items
3) Review idea lists of electronic kits and tools & supplies & begin to acquire

I will not expect completion of the requirements in the class and hence do not request partial worksheets.

During class I will cover each requirement via the IEEE material and demonstration. Scouts may be able to prepare their own answers.

For 4c, Scouts will need a kit and supplies. If scouts have this in time for class, all the better. I need to ensure safety and so I will not ask Scouts to assemble these during class.

II. Project ideas:
a. Control
    1. WHDTS Practice Soldering Learning Electronics Kit Smart Car approximately $10.99
b. Digital
    1. Caution: No reverse polarity protection for the 78L05. THIS IS MORE COMPLEX THAN OTHER KITS. With alarm.
    2. WHDTS C51 6-Digit DIY Digital Electronic Clock Kit approximately $10.99

3. (Same kit, different retailer) approximately $6.99 shipping not included
    - Note: These digital kits are interesting kits as they contain a microcontroller, AT89C2051 dome of you may be extremely curious about the AT89C2051 8-bit Microcontroller with 2K Bytes Flash.

c. Audio
    1. Elenco Practical Soldering Project Kit SP-1 Two-Tone European Siren approximately $8.95

III. Tools:

a. Good - Rhino AS-102 Soldering Iron approximately $6.99
b. Better - Ironton® 30 Watt, 120V Ironton Soldering Iron approximately $9.99 OR Vastar Soldering Iron Kit approximately $13.99
c. Much Better - Weller WLC100 40-Watt Soldering Station approximately $41.97
d. Package deal - Elenco Deluxe Learn to Solder Kit approximately $38.48. This includes a Soldering Station SL75T2 like above plus useful accessories, combined with project kit SP1-1. The home/hobbyist will probably find this toolset useful for YEARS

IV. Current Electronics Merit Badge Requirements

1. Describe the safety precautions you must exercise when using, building, altering, or repairing electronic devices.

2. Do the following:
    a. Draw a simple schematic diagram. It must show resistors, capacitors, and transistors or integrated circuits. Use the correct symbols. Label all parts.
    b. Tell the purpose of each part.

3. Do the following:
    a. Show the right way to solder and desolder.
    b. Show how to avoid heat damage to electronic components.
    c. Tell about the function of a printed circuit board. Tell what precautions should be observed when soldering printed circuit boards.

4. Do the following:

a. Discuss each of the following with your merit badge counselor:
    i. How to use electronics for a control purpose
    ii. The basic principles of digital techniques
    iii. How to use electronics for three different audio applications
b. Show how to change three decimal numbers into binary numbers, and three binary numbers into decimal numbers.
c. Choose ONE of the following three projects. For your project, find or create a schematic diagram. To the best of your ability, explain to your counselor how the circuit you built operates.
    i. A control device
    ii. digital circuit
    iii. An audio circuit

5. Do the following:
    a. Show how to solve a simple problem involving current, voltage, and resistance using Ohm's law.
    b. Tell about the need for and the use of test equipment in electronics. Name three types of test equipment. Tell how they operate.

6. Find out about three career opportunities in electronics that interest you. Discuss with and explain to your counselor what training and education are needed for each position.

4c Example

Choose ONE of the following three projects. For your project, find or create a schematic diagram. To the best of your ability, explain to your counselor how the circuit you built operates.

The schematic is to guide you.

For your 4c response, use your own words in some sentences to explain how this project works. Even 'simple' projects have several components and operations. I am asking for Scouts not get lost in the complexity but to try to understand and explain it generally, that's all. I will accept a description about just one item in the circuit - you may focus on just one component or multiple components if you wish.

Have fun!

What follows is my assistance to you for 4C response.

Class Catalog

2021 DCDMBM Virtual

My examples have a focus on the integrated circuit item in your kit and then the photo-resistor items:

Starting with the schematic, here is the schematic for your kit.

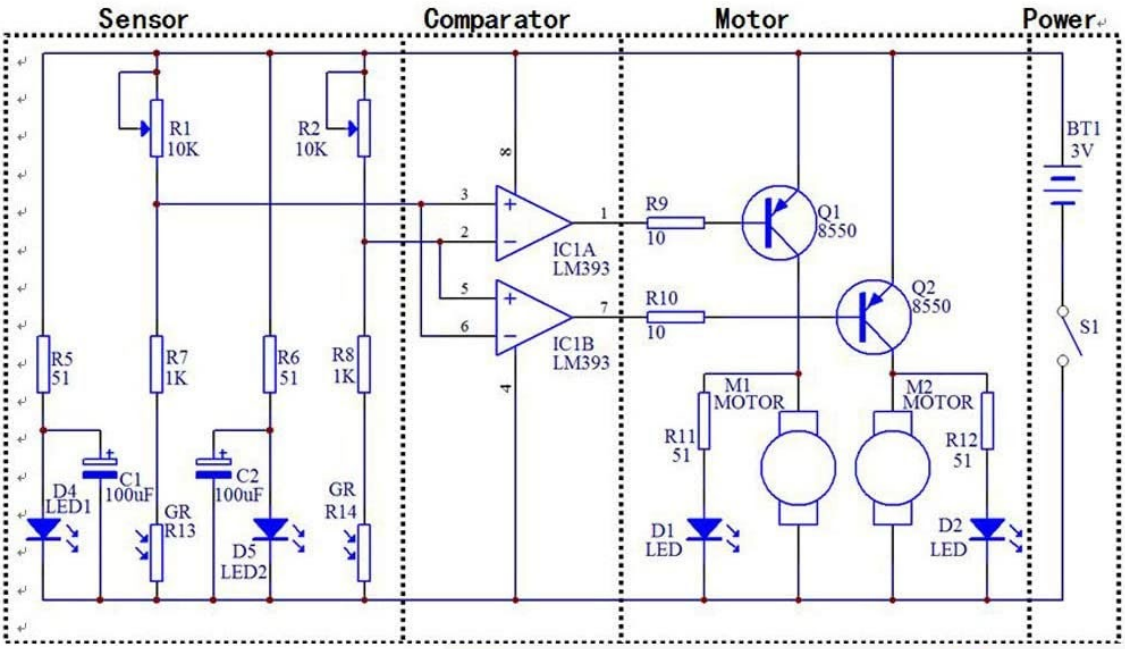

I. If you are wondering about the 'chip', notice the Integrated Circuit component, called an LM393 (a comparator).

This device is used to detect, electronically, if the photo-resistor sensors are in one of three conditions as the car operates on the tape line:

1. on tape
2. right of tape
3. left of tape

Sensing on-tape means both photo-resistors have equal resistance -> both motors get the same voltage.

Sensing right of tape means right photo-resistor has lower resistance due to greater light reflection-> the left motor voltage decreases

Sensing left of tape means left photo-resistor has lower resistance due to greater light reflection-> the right motor voltage decreases

So, this IC item is critical to the steering operation. Steering is accomplished by reducing motor voltage on the side opposite from the steering correction.

II. Or you may be interested in photo-resistors. You have to look-up how they operate. Here is the Wikipedia article.

Then you may wish to describe what their role is in your project:

- If there is more light, does a photo-resistor have more resistance or less resistance?
- How do you use this behavior in your kit?

Next, here is link to the kit ('Product Description')

III. There is a Wikipedia article on electronic comparator.

I hope the above helps you with item 4C.
If you are curious, setup a 'lab' for your kit, where you pick it up high enough, so the wheels no longer have surface contact. Then experiment with light and dark materials while using a multi-meter on the photo-resistors, motors, etc. Have more fun!

Additional Details: Electronics Worksheet

21DC122 Engineering, Programming

Engineers use both science and technology to turn ideas into reality, devising all sorts of things, ranging from a tiny, low-cost battery for your cell phone to a gigantic dam across the mighty Yangtze River in China.

Programming Merit Badge
Notes and Prerequisites:
Minimum age 13

We will be covering Programming and Engineering (in the context of software engineering). Students will need to have downloaded, installed, and confirmed they can run the latest version of VirtualBox prior to the course. A virtual machine for VirtualBox will be provided in advance of the course and students will need to install it in advance also. In the event a student has technical difficulties on the day of the course, we will do our best to work with them but cannot impede the progress of the whole class if a student can't get the software working. They would still be able to complete Engineering and get a partial for Programming if they are unable to run the software successfully.

Supplies needed while in class:

- Download, Install, and Confirm VirtualBox will run on the computer you plan to use.

Scouts should be prepared to do these items either before or after the class:

ENGINEERING

1. Select a manufactured item in your home (such as a toy or an appliance) and, under adult supervision and with the approval of your counselor, investigate how and why it works as it does. Find out what sort of engineering activities were needed to create it. Discuss with your counselor what you learned and how you got the information.

*** 6c will be covered in class, 6b is suggested as the second ***

2. Do TWO of the following:
    a. Transforming motion. Using common materials or a construction set, make a simple model that will demonstrate motion. Explain how the model uses basic mechanical elements like levers and inclined planes to demonstrate motion. Describe an example where

this mechanism is used in a real product.

b. Using electricity. Make a list of 10 electrical appliances in your home. Find out approximately how much electricity each uses in one month. Learn how to find out the amount and cost of electricity used in your home during periods of light and heavy use. List five ways to conserve electricity.
c. Understanding electronics. Using an electronic device such as a mobile telephone or portable digital media player, find out how sound travels from one location to another. Explain how the device was designed for ease of use, function, and durability.
d. Using materials. Do experiments to show the differences in strength and heat conductivity in wood, metal, and plastic. Discuss with your counselor what you have learned.
e. Converting energy. Do an experiment to show how mechanical, heat, chemical, solar, and/or electrical energy may be converted from one or more types of energy to another. Explain your results. Describe to your counselor what energy is and how energy is converted and used in your surroundings.

PROGRAMMING

1. a. Show your counselor your current, up-to-date Cyber Chip.
*** Earning the Cyber Chip can help you learn how to stay safe while you are online and using social networks or the latest electronic gadgets. Topics include cell phone use, texting, blogging, gaming, cyberbullying, and identity theft. Find out more about the Cyber Chip at www.scouting.org/cyberchip.

Additional Details: Engineering Worksheet, Programming Worksheet

21DC114 Family Life

The family is the basic unit of society and is important to both individuals and communities. The world is rapidly changing, making today's society much more complex than ever before. As Scouts earn this merit badge, they will realize why it is important to know more about family life and how to strengthen their families.

Notes and Prerequisites: Scouts should be prepared to do these items either

before or after the class:

Per the instructor there may need to be a follow-up homework Zoom 1 week after merit badge class or the Scout should provide info showing completion for the following requirements:

1. Prepare an outline on what a family is and discuss this with your merit badge counselor. Tell why families are important to individuals and to society. Discuss how the actions of one member can affect other members.

3. Prepare a list of your regular home duties or chores (at least five) and do them for 90 days. Keep a record of how often you do each of them. Discuss with your counselor the effect your chores had on your family.

*** THESE ITEMS NEED COUNSELOR APPROVAL BEFORE COMPLETING

4. With the approval of your parents or guardians and your merit badge counselor, decide on and carry out a project that you would do around the home that would benefit your family. Submit a report to your merit badge counselor outlining how the project benefited your family.

5. Plan and carry out a project that involves the participation of your family. After completing the project, discuss the following with your merit badge counselor:
    a. The objective or goal of the project
    b. How individual members of your family participated
    c. The results of the project

******

6. (b) After this discussion, plan and carry out a family meeting to include the following subjects:
    (1) Avoiding substance abuse, including tobacco, alcohol, and drugs, all of which negatively affect your health and well-being
    (2) Understanding the growing-up process and how the body changes, and making responsible decisions dealing with sex (This conversation may take place with only one or both of your parents or guardians)
    (3) How your chores in requirement 3 contributed to your role in the family
    (4) Personal and family finances
    (5) A crisis situation within your family
    (6) The effect of technology on your family
    (7) Good etiquette and manners

Additional Details: Family Life Worksheet

21DC115 Fingerprinting

In earning the Fingerprinting merit badge, Scouts will learn about and use an important technique that is used by law enforcement officers, along with other materials like matching dental records and DNA sampling, to help identify amnesia victims, missing persons, abducted children, and others.

Additional Details: Fingerprinting Worksheet

21DC116 Fire Safety

The ability to use fire safely is essential to human survival. By earning this merit badge, Scouts will learn to uses fire safely and responsibly, how to prevent home fires, and how to handle fire safely, as well as burn prevention, and camping safety.

Notes and Prerequisites: Scouts should be prepared to do these items either before or after the class:

Per the instructor: This Badge requires several individual items that cannot be completed in a group setting. Accordingly, in addition to attending all of the online class, the participant must complete the following in order to complete the

Badge.

6. Conduct a home safety survey with the help of an adult. Then do the following:
    a. Draw a home fire-escape plan, create a home fire-drill schedule, and conduct a home fire drill. ***May be scanned or photographed and emailed to Counselor at email address provided in class.
    b. Test a smoke alarm and demonstrate regular maintenance of a smoke alarm.

    ***May do a short demo video demonstrating test and explaining regular maintenance and submit via email link to Counselor.

7. Do the following:
    a. Demonstrate lighting a match safely.
    b. Demonstrate the safe way to start a charcoal fire.
    c. Demonstrate how to safely light a candle. Discuss with your counselor how to safely use candles.

    ***May be videoed and link sent to Counselor

10. Do the following:
    a. Demonstrate setting up and putting out a cooking fire.
    b. Demonstrate using a camp stove and lantern.

    ***May be videoed and link sent to Counselor

*** Be prepared to discuss this requirement in class

13. Choose a fire safety-related career that interests you and describe the level of education required and responsibilities of a person in that position. Tell why this position interests you.

Additional Details: Fire Safety Worksheet

21DC117 Genealogy, Scouting Heritage

Exploring your roots - where your family name came from, why your family lives where it does, what your parents and grandparents did for fun when they were your age - can be fascinating. Discovering your ancestors back through history is what genealogy is all about.

Introduces boys to the history of the Boy Scouts of America. They'll learn it all - from Scouting's beginnings under Lord Baden-Powell to the history of

their own troop.

Scouts should be prepared to do these items either before or after the class:

GENEALOGY (without these done ahead of class this will be partially completed)

2. (a) Create a timeline for yourself or for a relative. Then write a short biography based on that timeline.

3. With your parent's help, choose a relative or a family acquaintance you can interview in person, by telephone, or by email or letter. Record the information you collect so you do not forget it.

4. (b) Obtain at least one genealogical document that supports an event that is or can be recorded on your pedigree chart or family group record. The document could be found at home or at a government office, religious organization, archive, or library.

5. Contact ONE of the following individuals or institutions. Ask what genealogical services, records, or activities this individual or institution provides, and report the results:
    a. A genealogical or lineage society
    b. A professional genealogist (someone who gets paid for doing genealogical research)
    c. A surname organization, such as your family's organization
    d. A genealogical educational facility or institution
    e. A genealogical record repository of any type (courthouse, genealogical library, state or national archive, state library, etc.)

SCOUTING HERITAGE (This will be a partial completion)

4. Do ONE of the following:
    a. Attend either a BSA national jamboree, OR world Scout jamboree, OR a national BSA high-adventure base. While there, keep a journal documenting your day-to-day experiences. Upon your return, report to your counselor what you did, saw, and learned. You may include photos, brochures, and other documents in your report.
    b. Write or visit the National Scouting Museum. Obtain information about this facility. Give a short report on what you think the role of this museum is in the Scouting program.
    c. Visit an exhibit of Scouting memorabilia or a local museum with a Scouting history gallery, or (with your parent's permission and counselor's approval) visit with someone in your council who is recognized as a dedicated Scouting historian or memorabilia collector. Learn what you can about the history of Boy Scouting. Give a short report to your counselor on what you saw and learned.

5. Learn about the history of your unit or Scouting in your area. Interview at least two people (one from the past and one from the present) associated with your troop. These individuals could be adult unit leaders, Scouts, troop committee members, or representatives of your troop's chartered organization. Find out when your unit was originally chartered. Create a report of your findings on the history of your troop and present it to your patrol or troop or at a court of honor, and then add it to the troop's library. This presentation could be in the form of an oral/written report, an exhibit, a scrapbook, or a computer presentation such as a slide show.

*** Scout must have a collection to show during class ***

6. Make a collection of some of your personal patches and other Scouting memorabilia. With their permission, you may include items borrowed from family members or friends who have been in Scouting in the past, or you may include photographs of these items. Show this collection to your counselor and share what you have learned about items in the collection. (There is no requirement regarding how large or small this collection must be.)

7. Reproduce the equipment for an old-time Scouting game such as those

played at Brownsea Island. You may find one on your own (with your counselor's approval) or pick one from the Scouting Heritage merit badge pamphlet. Teach and play the game with other Scouts.

Additional Details: Genealogy Worksheet, Scouting Heritage Worksheet

21DC118 Insect Study

In earning the Insect Study merit badge, Scouts will glance into the strange and fascinating world of the insect. There, they will meet tiny creatures with tremendous strength and speed, see insects that undergo startling changes in habits and form as they grow, and learn how insects see, hear, taste, smell, and feel the world around them.

Notes and Prerequisites:
Supplies needed while in class:

- The instructor will email a materials list prior to class

Scouts should be prepared to do these items either before or after the class:

5. Do the following:
    a. Observe 20 different live species of insects in their habitat. In your observations, include at least four orders of insects.
    b. Make a scrapbook of the 20 insects you observe in 5a. Include photographs, sketches, illustrations, and articles. Label each insect with its common and scientific names, where possible. Share your scrapbook with your merit badge counselor.

6. (a) From your scrapbook collection, identify three species of insects helpful to humans and five species of insects harmful to humans.

9. Raise an insect through complete metamorphosis from its larval stage to its adult stage (e.g., raise a butterfly or moth from a caterpillar).

Additional Details: Insect Study Worksheet

21DC119 Law

Earning this merit badge enables a Scout to learn about the history and kinds of

laws, the purpose and methods of law enforcement, consumer protection agencies, emerging law, and careers in the legal profession.

Additional Details: Law Worksheet

21DC120 Music

The history of music is rich and exciting. Through the ages, new music has been created by people who learned from tradition, then explored and innovated. All the great music has not yet been written. Today, the possibilities for creating new music are limitless.

Notes and Prerequisites:
Supplies needed while in class:

- Musical Instrument
- Copy of the Workbook linked below

Scouts should be prepared to do these items either before or after the class:

*** Scouts must be prepared to perform in class and email the instructor a picture of the music. ***

1. Sing or play a simple song or hymn chosen by your counselor, using good technique, phrasing, tone, rhythm, and dynamics. Read all the signs and terms of the score.

*** An email from the music instructor at school will be fine as proof, HOWEVER if this is their first year in band it will not have been six months yet. ***

3. (c) Serve for six months as a member of a school band, choir, or other organized musical group, or perform as a soloist in public six times.

4. Do ONE of the following:
    a. Teach three songs to a group of people. Lead them in singing the songs, using proper hand motions. *** Scouts can make a recording and share it with the class or email it to the instructor. ***
    b. Compose and write the score for a piece of music of 12 measures or more, and play this music on an instrument. *** Scouts must email the instructor the composition and be prepared to perform in class. ***

c. Make a traditional instrument and learn to play it. *** The instrument the Scout makes has to make noise. ***

Additional Details: Music Worksheet

21DC121 Personal Management

Personal management is about mapping a plan for your life that will involve setting short- range and long-range goals and investigating different ways to reach those goals.
Education, training, and experience all help make your goals become a reality. To achieve your goals, you will choose the best path and make a commitment to it, while remaining flexible enough to deal with changes and new opportunities.

Notes and Prerequisites:
Min. Rank: First Class
Supplies needed while in class:

- Paper
- Pencil
- Scissors

Scouts should be prepared to do these items either before or after the class:
Scouts will need to do a follow-up homework Zoom about 1 week after merit badge class or provide info showing completion (before or after) for the following requirements: Personal Management: 1, 2, 8, 9

1. Do the following:
    a. Choose an item that your family might want to purchase that is considered a major expense.
    b. Write a plan that tells how your family would save money for the purchase identified in requirement 1a.
        i. Discuss the plan with your merit badge counselor.
        ii. Discuss the plan with your family.
        iii. Discuss how other family needs must be considered in this plan.
    c. Develop a written shopping strategy for the purchase identified in requirement 1a.
        i. Determine the quality of the item or service (using consumer publications or ratings systems).

ii. Comparison shop for the item. Find out where you can buy the item for the best price. (Provide prices from at least two different price sources.) Call around, study ads. Look for a sale or discount coupon. Consider alternatives. Can you buy the item used? Should you wait for a sale?

2. Do the following:
    a. Prepare a budget reflecting your expected income (allowance, gifts, wages), expenses, and savings for a period of 13 consecutive weeks.
    b. Compare expected income with expected expenses.
        i. If expenses exceed budget income, determine steps to balance your budget.
        ii. If income exceeds budget expenses, state how you would use the excess money (new goal, savings).
    c. Track and record your actual income, expenses, and savings for 13 consecutive weeks (the same 13-week period for which you budgeted). (You may use the forms provided in this pamphlet, devise your own, or use a computer-generated version.) When complete, present the records showing the results to your merit badge counselor.
    d. Compare your budget with your actual income and expenses to understand when your budget worked and when it did not work. With your merit badge counselor, discuss what you might do differently the next time.

3. Demonstrate to your merit badge counselor your understanding of time management by doing the following:
    a. Write a “to do” list of tasks or activities, such as homework assignments, chores, and personal projects, that must be done in the coming week. List these in order of importance to you.
    b. Make a seven-day calendar or schedule. Put in your set activities, such as school classes, sports practices or games, jobs or chores, and/or Scout or place of worship or club meetings, then plan when you will do all the tasks from your “to do” list between your set activities.
    c. Follow the one-week schedule you planned. Keep a daily diary or journal during each of the seven days of this week’s activities, writing down when you completed each of the tasks on your “to

do" list compared to when you scheduled them.

d. With your merit badge counselor, review your "to do" list, one-week schedule, and diary/journal to understand when your schedule worked and when it did not work. Discuss what you might do differently the next time.

4. Prepare a written project plan demonstrating the steps below, including the desired outcome. This is a project on paper, not a real-life project. Examples could include planning a camping trip, developing a community service project or a school or religious event, or creating an annual patrol plan with additional activities not already included in the troop annual plan. Discuss your completed project plan with your merit badge counselor.
    a. Define the project. What is your goal?
    b. Develop a timeline for your project that shows the steps you must take from beginning to completion.
    c. Describe your project.
    d. Develop a list of resources. Identify how these resources will help you achieve your goal.
    e. Develop a budget for your project.

Additional Details: Personal Management Worksheet

21DC123 Public Health

The field of public health deals with maintaining and monitoring the health of communities, and with the detection, cure, and prevention of health risks and diseases. Although public health is generally seen as a community-oriented service, it actually starts with the individual. From a single individual to the family unit to the smallest isolated rural town to the worldwide global community, one person can influence the health of many.

Notes and Prerequisites: NOTE: Parents, due to the nature of topics covered in this merit badge you may want to use your discretion on the age and maturity of your Scout prior to their attendance.

Supplies and documents needed while in class:

PUBLIC HEALTH PREP STEPS:

Class Catalog

2021 DCDMBM Virtual

1. Send an e-mail to your Scoutmaster TODAY letting them know that you are going to be doing an online 2021 Merit Badge Mania with Duck Creek Circle 10 Council.

2. Download the Merit Badge Requirement Revised Effective January 1, 2018.

   Review the requirements for PUBLIC HEALTH.
   Requirements will be covered during the online session or be part of a focused activity you will do at home
   - Requirement #1, 2, and 7 must be completed prior to the workshop.
   - Requirement #3, #4, & #6 will be discussed in class
   - Requirement #8 can be turned - in after sessions are complete.
   - Requirement #5 will not be covered.

   Our sessions will only cover 70%-80% of the requirements...it is up to YOU to complete this badge.

3. Links for Requirement 7b - Familiarize yourself with city, county, or state health agency
   - Texas: https://www.dshs.texas.gov
   - Local Counties:
     - Tarrant
     - Dallas
   - Other States: https://www.cdc.gov/publichealthgateway/healthdirectories

   After completing either 7b, do the following:
   i. Compare the four leading causes of mortality (death) in your community for any of the past five years with the four leading causes of disease in your community. Explain how the public health agency you visited is trying to reduce the mortality and morbidity rates of these leading causes of illness and death.
   ii. Explain the role of your health agency as it relates to the outbreak of diseases.
   iii. Discuss the kinds of public assistance the agency is able to provide in case of disasters such as floods, storms, tornadoes, earthquakes, and other acts of destruction. Your discussion can include the cleanup necessary after the disaster.

4. GOOGLE! Do a search for “public health” and spend some time reading a bit more about current events and how public health impacts our community, country, and world.

5. Be ready 5 minutes before your Merit Badge time...for Public Health MB, your sessions to begin! Please

   When you sign into the session, you will be able to hear and see the presenter. You will also be able to TYPE questions on a chat field that the presenter will be able to answer. Please mute your phone unless you are asking/answering a question. You MUST turn-in your completed answers for each Merit Badge for credit!

Additional Details: Public Health Worksheet

21DC200 Religious Emblems Coordinator/Chaplain/Chaplain's Aide Training

Religious Emblem Coordinator -
Religious Emblems Coordinator (REC) positions exist at the Council, District and Unit levels. The REC's are responsible for educating, motivating, evaluating, and expanding the usage of the religious emblems programs.

Chaplain/Chaplain's Aide -
Chaplains provide a spiritual tone for all unit meetings and camping experiences, and work with the unit's chaplain aide to plan and conduct Scout-oriented religious observances.
While serving in these offices, you will have an opportunity to contribute to the spiritual welfare and growth of both Scouts and their leaders. This course will provide helpful information and resources to help you become better oriented to the duties, responsibilities, and opportunities of chaplaincy service in BSA Units and Districts.

21DC124 Scholarship

Working on the Scholarship merit badge provides Scouts with a great opportunity to become more successful in school. They will learn how to improve their skills in the classroom, develop good study habits, and master techniques for writing reports and taking tests.

Notes and Prerequisites: This Merit Badge will require the Scout to accomplish the work prior to the online event or there will be only partial credit. We will

Class Catalog

2021 DCDMBM Virtual

Discuss the Scouts efforts during the time and items will be checked off.

Scouts should be prepared to do these items either before or after the class:

1. Do ONE of the following: (PRINTED)
    a. Show that your school grades have been an average of B or higher (80 percent or higher) for one term or semester.
    b. Show that for one term or semester you have improved your school grades over the previous period.

2. Do TWO of the following:
    a. Make a list of educational places located where you live (other than schools). Visit one, and report on how you used the place for self-education.
    c. Using a daily planner, show your counselor how you keep track of assignments and activities, and discuss how you manage your time. *** Scouts may use the Sample Planner in the usscouts.org Workbook or their own planner***
    d. Discuss the advantages and disadvantages of the different methods of research available to you for school assignments, such as the library, books and periodicals, and the internet.

3. Get a note from the principal* of your school (or another school official named by the principal) that states that during the past year your behavior, leadership, and service have been satisfactory.

4. Do ONE of the following:
    a. Show that you have taken part in an extracurricular school activity and discuss with your counselor the benefits of participation and what you learned about the importance of teamwork.
    b. Discuss your participation in a school project during the past semester where you were a part of a team. Tell about the positive contributions you made to the team and the project.

5. Do ONE of the following:
    a. Write a report of 250 to 300 words about how the education you receive in school will be of value to you in the future and how you will continue to educate yourself in the future.
    b. Write a report of 250 to 300 words about two careers that interest

you and how specific classes and good scholarship in general will help you achieve your career goals.

Additional Details: Scholarship Worksheet

21DC125 Soil and Water Conservation

Conservation isn't just the responsibility of soil and plant scientists, hydrologists, wildlife managers, landowners, and the forest or mine owner alone. It is the duty of every person to learn more about the natural resources on which our lives depend so that we can help make sure that these resources are used intelligently and cared for properly.

Notes and Prerequisites:
Supplies needed while in class:

- Read the Soil and Water Conservation Merit Badge Pamphlet be sure to review the current requirements.
- Paper
- Pencil
- Optional * Tracing Paper works best for 7d
- Print the Area topographical map included here for Requirements 4b and 4c

Scouts should be prepared to do these items either before or after the class:

****These will be shared and discussed in class ****

2. (d) Take pictures or draw two kinds of soil erosion.

3. (c) Take pictures or draw three kinds of erosion-control practices.

7. (d) Study a soil survey report. Describe the things in it. On tracing paper over any of the soil maps, outline an area with three or more different kinds of soil. List each kind of soil by full name and map symbol.

*** The instruction will use Dallas County Soil Survey Reports - found at this link The Portal to Texas History Print any one of the map pages (i.e., map##.pdf). Use the legend.pdf on the same site page to list each kind of soil by full name and map symbol.

7. (e) Make a list of places in your neighborhood, camps, school ground, or

park that have erosion, sedimentation, or pollution problems. Describe how these could be corrected through individual or group action *** The instructor requests Scouts visit the places in addition to making a list.

BOY SCOUTS OF AMERICA®
CIRCLE TEN COUNCIL

Class Catalog

2021 DCDMBM Virtual

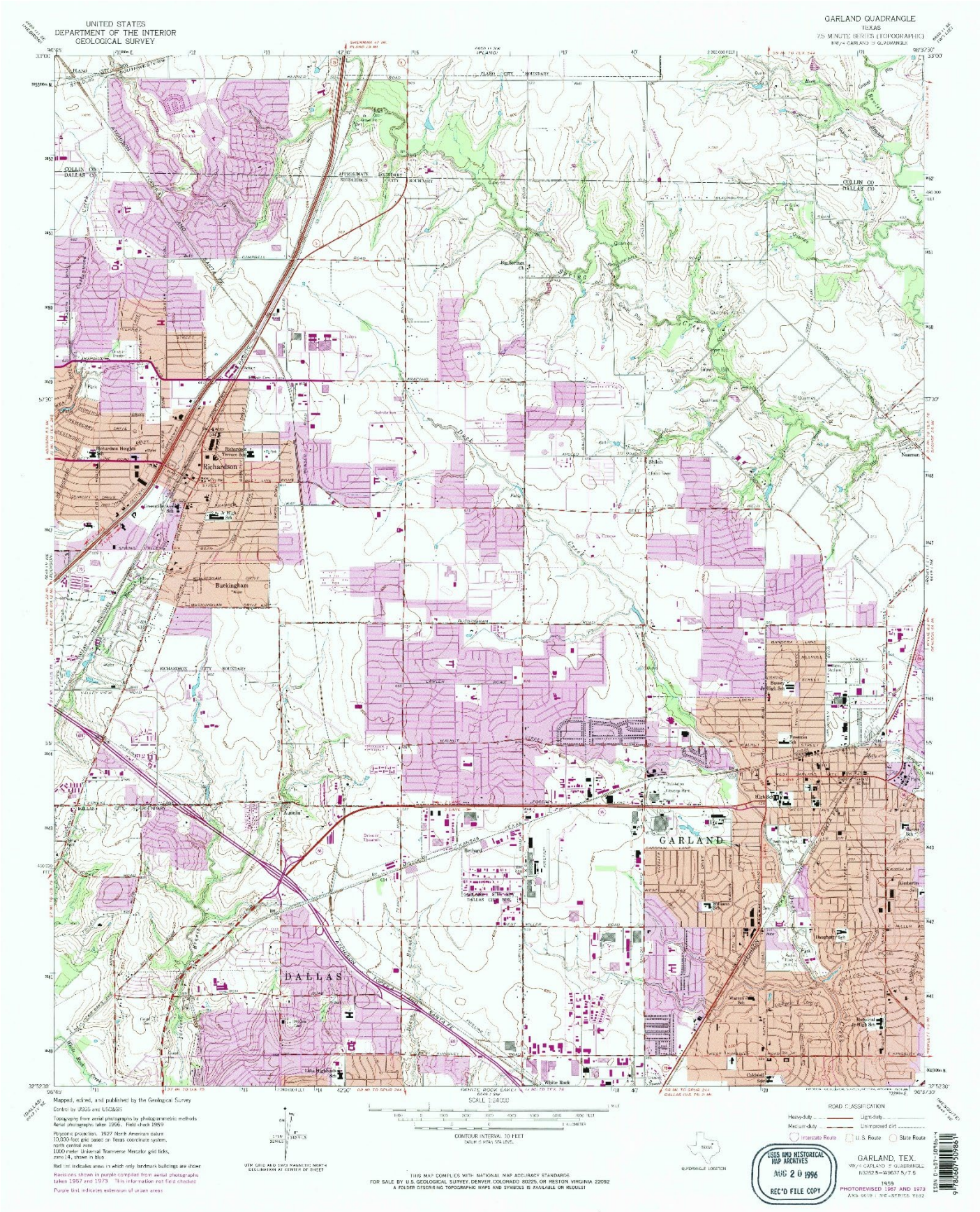

21DC126 Space Exploration

Space is mysterious. We explore space for many reasons, not least because we don't know what is out there, it is vast, and humans are full of curiosity. Each time we send explorers into space, we learn something we didn't know before. We discover a little more of what is there.

Notes and Prerequisites:
Supplies needed while in class:

- Round pie pan with straight walls OR Frisbee
- Marble OR ping pong ball
- Uninflated balloon
- Sheet of graph paper
- Pen or Pencil

Scouts should be prepared to do these items either before or after the class:

2. Design a collector's card, with a picture on the front and information on the back, about your favorite space pioneer. Share your card and discuss four other space pioneers with your counselor.

3. Build, launch, and recover a model rocket. * Make a second launch to accomplish a specific objective. (Rocket must be built to meet the safety code of the National Association of Rocketry. See the "Model Rocketry" chapter of the Space Exploration merit badge pamphlet.) Identify and explain the following rocket parts. *** Scouts may submit proof (Pictures, stores, etc.) of completion.
    a. Body tube
    b. Engine mount
    c. Fins
    d. Igniter
    e. Launch lug
    f. Nose cone
    g. Payload
    h. Recovery system
    i. Rocket engine

*If local laws prohibit launching model rockets, do the following activity: Make a model of a NASA rocket. Explain the functions of the parts. Give the history of the rocket.

Additional Details: Space Exploration Worksheet

21DC127 Stamp Collecting

The world's most popular hobby, stamp collecting is enjoyed by millions throughout the world. Through this hobby. you can experience history: postage stamps are like tiny windows that introduce the people of the world to the country's leaders, customs, history, products, and environment.

Notes and Prerequisites: Scouts should be prepared to do these items either before or after the class:

Scouts who have just started a stamp collection or never collected stamps before should have their parent or sponsor contact Mystic Stamp Company on-line (Mystic Stamp Co.) or by phone (9 AM 6 PM eastern time -- 1-800-433-7811) and ask for a start-up booklet & package to stamp collection. This will give new collectors some tools/information to help them start on the requirements.

We will discuss all requirements during the session and indicate what would fulfill the requirements to be successful. I will schedule reviews, either that day or in the next few weeks on-line or phone for completion.

Additional Details: Stamp Collecting Worksheet

21DC128 Traffic Safety

Staying safe in traffic wherever you live is getting more difficult all the time, as more and more people take to the road. Earning the Traffic Safety merit badge and will give Scouts some crucial tools to stay safer, when driving a car on a highway, riding a bike across town, or jogging across a busy street.

Notes and Prerequisites: Scouts should be prepared to do these items either before or after the class:

*** These requirements may be done in class however the Scout must have access to a vehicle if not able to show vehicle on screen, these requirements will need to be completed outside of class. Photographic evidence of this will be accepted, however the Scout MUST BE in the photographs for evidence of completion.

2. (a) Demonstrate how to properly wear a lap or shoulder belt. Explain why it is important for drivers and passengers to wear safety belts at all times.

3. Do the following:
    a. Using your family car or another vehicle, demonstrate that all lights and lighting systems in the vehicle are working. Describe the function and explain why each type of light is important to safe driving.
    b. Using your family car or another vehicle, demonstrate how to check tire pressure and identify the correct tire pressure for the vehicle. Explain why proper tire pressure is important to safe driving.
    d. Demonstrate with a smear-and-clear test if the windshield wiper blades will clear the windshield completely or need to be replaced. Describe instances in good and bad weather when windshield washers are important to safe driving.

*** 5(b) will be completed in class, if a Scout chooses to complete another option for 5, they will need to provide it during class.

5. Do ONE of the following:
    a. Interview a traffic law enforcement officer in your community to identify what three traffic safety problems the officer is most concerned about. Discuss with your merit badge counselor possible ways to solve one of those problems.
    c. Initiate and organize an activity or event to demonstrate the importance of traffic safety.
    d. Accompanied by an adult and a buddy, pick a safe place to observe traffic at a controlled intersection (traffic signal or stop sign) on three separate days and at three different times of the day, for 30 minutes on each visit. At this intersection, survey violations that might occur. These violations might include (but are not limited to) running a red light or stop sign, speeding, using a cell phone while driving, or occupants not wearing their seat belts. Count the number of violations. Record in general terms the approximate age of the people you observed. Keep track of the total number of vehicles observed so that you can determine the percentage of compliance vs. violations. Discuss your findings with your merit badge counselor.

*** Requirement 4(a) should be done outside of class. Photographic evidence of this will be accepted, however the Scout MUST BE in the photographs for evidence of completion.

4. (a) In a location away from traffic hazards, measure with a tape measure-not in a car-and mark off with stakes the distance that a car will travel during the time needed for decision and reaction, and the braking distances necessary to stop a car traveling 30, 50, and 70 miles per hour on dry, level pavement. Discuss how environmental factors such as bad weather and road conditions will affect the distance.

Additional Details: Traffic Safety Worksheet

21DC129 Weather

Meteorology is the study of Earth's atmosphere and its weather and the ways in which temperature, wind, and moisture act together in the environment. In addition to learning how everyday weather is predicted, Scouts can learn about extreme weather such as thunderstorms, tornadoes, and hurricanes, and how to stay safe.

Notes and Prerequisites: Scouts should be prepared to do these items either before or after the class:

6. Draw a diagram of the water cycle and label its major processes. Explain the water cycle to your counselor.

9. Do ONE of the following:

    a. Make one of the following instruments: wind vane, anemometer, rain gauge, hygrometer. Keep a daily weather log for one week using information from this instrument as well as from other sources such as local radio and television stations, NOAA Weather Radio All Hazards, and internet sources (with your parent's permission). Record the following information at the same time every day: wind direction and speed, temperature, precipitation, and types of clouds. Be sure to make a note of any morning dew or frost. In the log, also list the weather forecasts from radio or

television at the same time each day and show how the weather really turned out.

b. Visit a National Weather Service office or talk with a local radio or television weathercaster, private meteorologist, local agricultural extension service officer, or university meteorology instructor. Find out what type of weather is most dangerous or damaging to your community. Determine how severe weather and flood warnings reach the homes in your community.

10. Give a talk of at least five minutes to a group (such as your unit or a Cub Scout pack) explaining the outdoor safety rules in the event of lightning, flash floods, and tornadoes. Before your talk, share your outline with your counselor for approval.

11. Find out about a weather-related career opportunity that interests you. Discuss with and explain to your counselor what training and education are required for such a position, and the responsibilities required of such a position.

Additional Details: Weather Worksheet

Class Catalog

2021 DCDMBM Virtual

Class Periods

Class Number	Title	Periods Needed	AM Session	PM Session	Fee
21DC100	American Business	1	A		$5.00
21DC101	American Labor	1	A	B	$5.00
21DC102	Animation	1	A	B	$5.00
21DC103	Architecture	1		A	$5.00
21DC104	Art & Photography	1	A		$5.00
21DC105	Astronomy	1	A		$5.00
21DC106	Citizenship in the Community	1		A	$5.00
21DC107	Citizenship in the Nation	1	A		$5.00
21DC108	Citizenship in the World	1	A		$5.00
21DC109	Coin Collecting	1		A	$5.00
21DC110	Collections	1	A	B	$5.00
21DC111	Communication	1	A		$5.00
21DC112	Electricity	1	A		$5.00
21DC113	Electronics	1	A		$5.00
21DC122	Engineering & Programming	2	A	A	$5.00
21DC114	Family Life	1	A		$5.00
21DC115	Fingerprinting	1	A	B	$5.00
21DC116	Fire Safety	1	A		$5.00
21DC117	Genealogy & Scouting Heritage	1		A	$5.00
21DC118	Insect Study	1		A	$5.00
21DC119	Law	1	A	B	$5.00
21DC120	Music	1	A		$5.00
21DC121	Personal Management	1		A	$5.00
21DC123	Public Health	1	A	B	$5.00
21DC200	REC/Chaplain/Chaplain's Aide Training	1		A	
21DC124	Scholarship	1	A		$5.00
21DC125	Soil and Water Conservation	1	A		$5.00
21DC126	Space Exploration	1	A		$5.00
21DC127	Stamp Collecting	1	A		$5.00
21DC128	Traffic Safety	1	A		$5.00
21DC129	Weather	1	A		$5.00